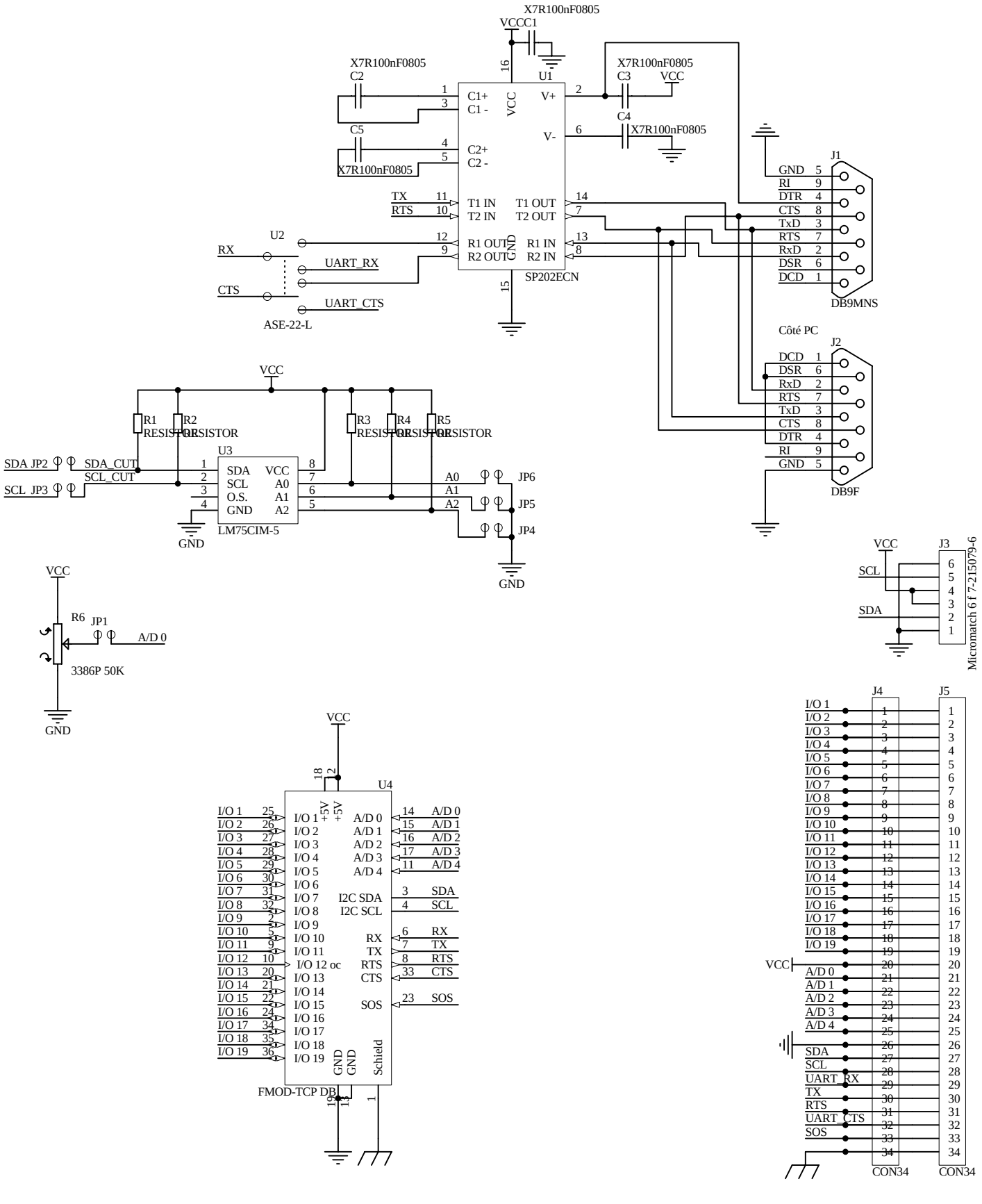

Logo FiveCo

Title *FMod-TCP DB SK*		
Size: A4	Author: AG	Revision: 1.1
Date: 21.01.2008	Time: 10:16:39	Sheet 1 of 1
File: FMod-TCP DB SK v1.1.SchDoc		

FiveCo
Ch. de la Rueyre 116
CH-1020 Renens
http://www.fiveco.ch

fiveco innovative engineering